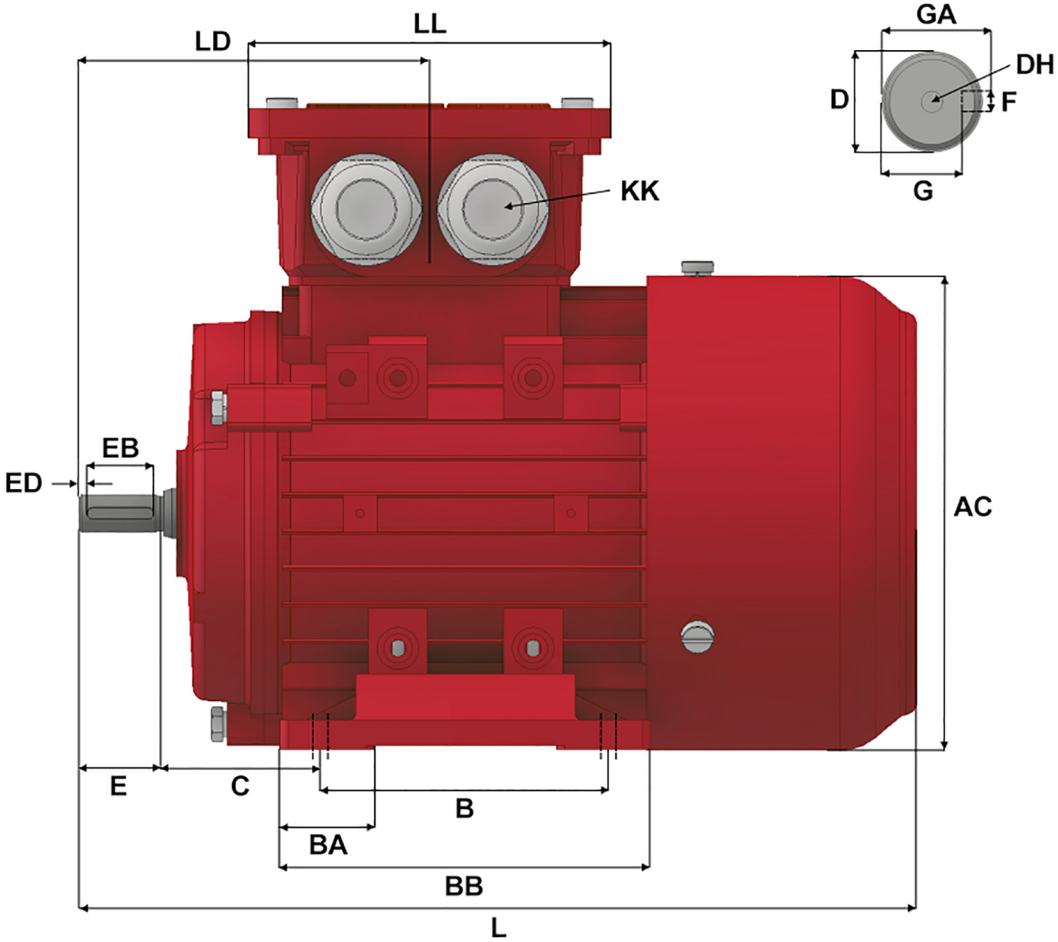

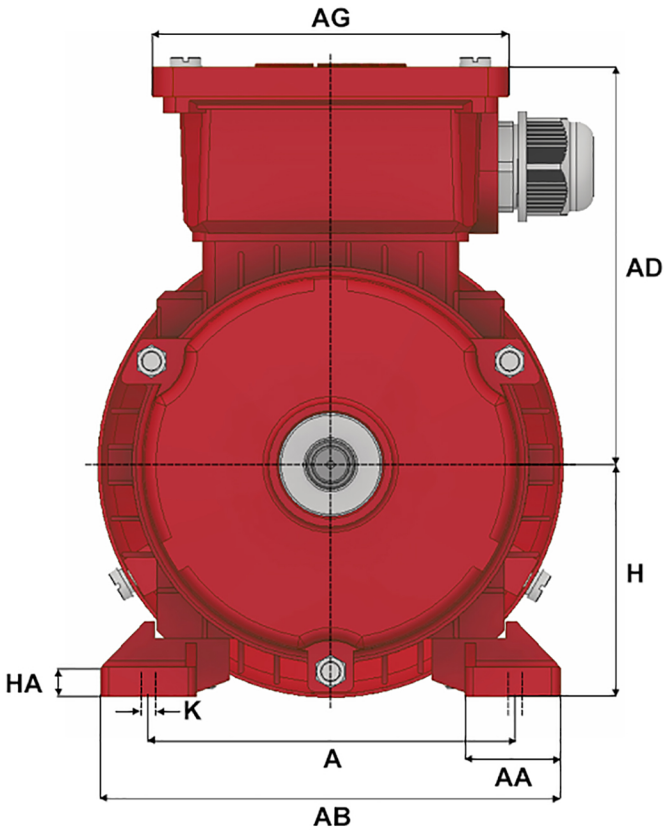

Version: 1JLEM	Revised: 09-11-2019	HP	RPM	FRAME	ENCLOSURE	IJA633-4-B3
Customer is responsible in determining that Max Motion product will fit/perform suitably in the intended application		0.33	1595	63	TEFC	

A	B	C	D	E	F	G	H	K	L	AA	AB	AC
100	80	40	11	23	4	8.5	63	7 X 9.5	217	24	123	120
AD	**AG**	**BA**	**BB**	**DH**	**EB**	**ED**	**GA**	**HA**	**KK (1)**	**KK (2)**	**KK (3)**	**LD**
103	101	23.5	100	M4 X 12	16	3.5	12.5	7	M20 X 1.5	1/2'' NPT	-	95.5
LL												
101												